Nauticam
innovation underwater

19550 C1124-Z

Zoom Gear for Canon EF 11-24mm f/4L USM

Please follow the instructions below to mount the dedicated zoom gear on the lens.

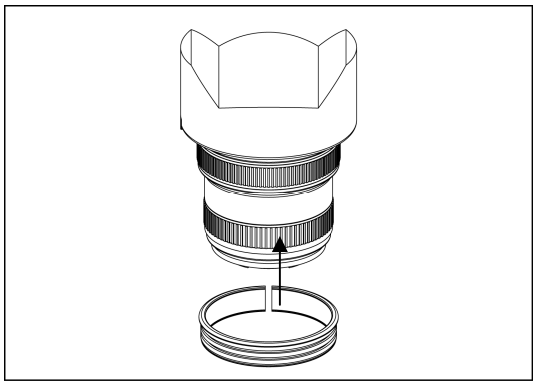

1. Insert the plastic c-ring as shown and place it over the lens rubber zoom ring.

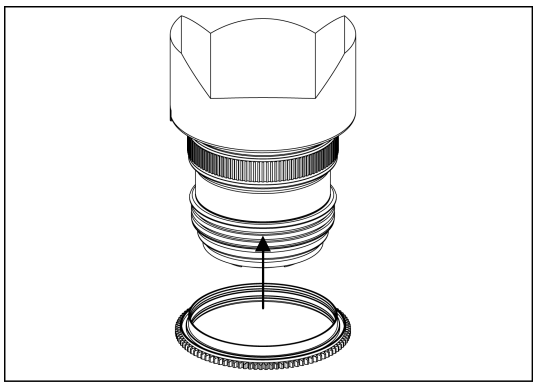

2. Insert the gear of C1124-Z on the plastic c-ring until it reaches the flange of the plastic c-ring.

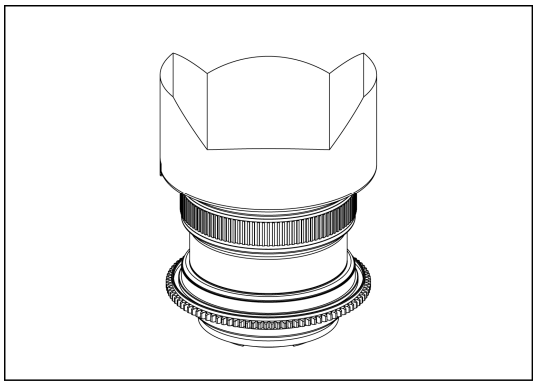

3. To remove the C1124-Z gear, reverse the above steps.
4. The tightness between the C1124-Z gear and the lens can be adjusted by removing or adding rubber grips on either sides of the plastic c-ring, spare rubber grips are included in the package.